6HP19/21

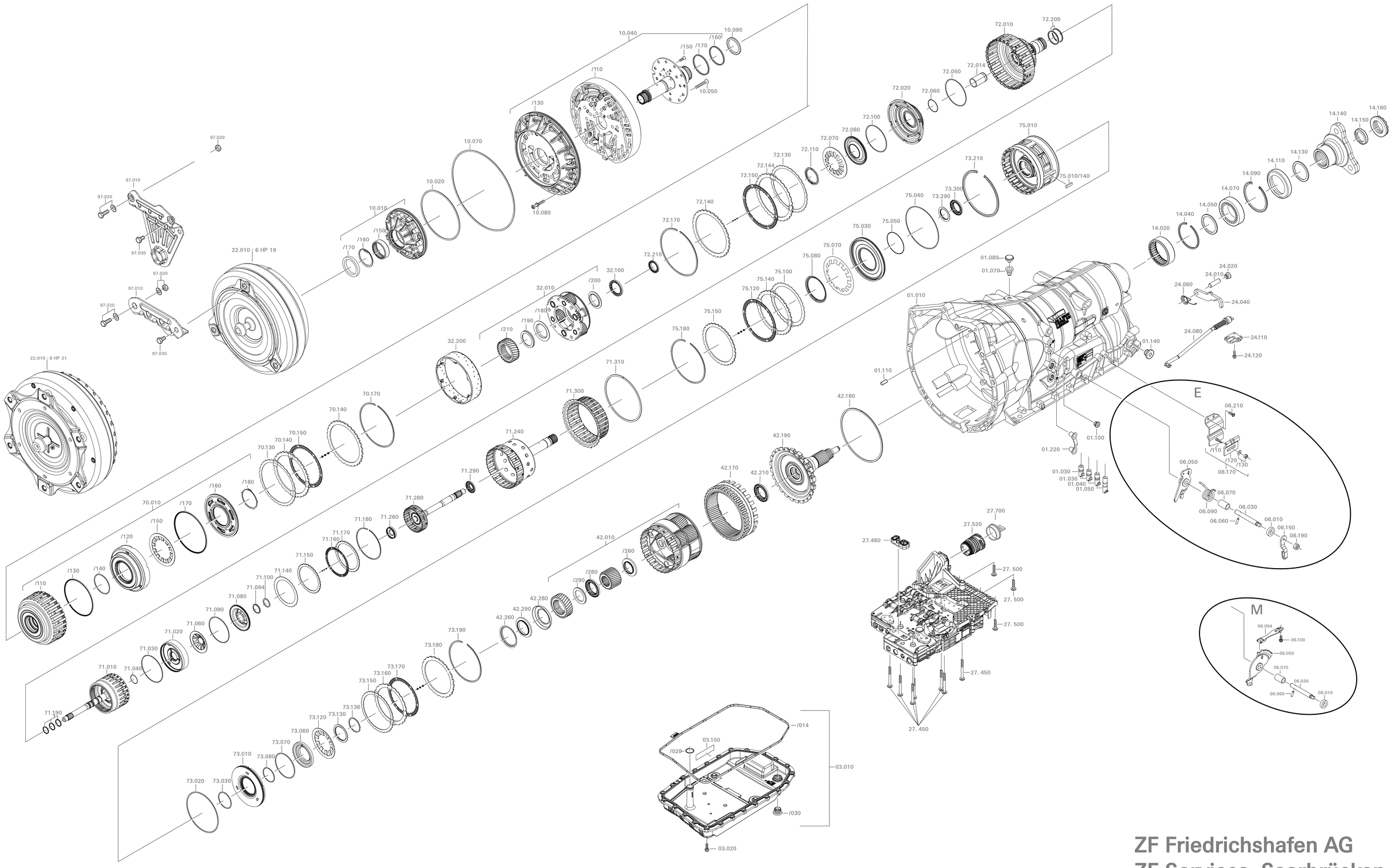

ZF Friedrichshafen AG
ZF Services, Saarbrücken